# Product Datasheet

## Over door mounted unheated safety shower

EXP-23GS/OD

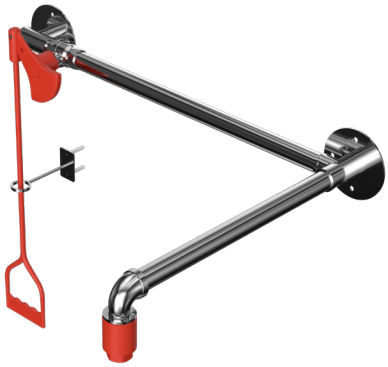

Emergency safety shower designed specifically to mount above a door as a space saving option. Small on space, and big on functionality, this unheated safety shower provides a complete decontamination at a flow rate of 76 litres per minute.

Meets EN15154 and ANSI Z358.1-2014 standards.

## Specifications

| | |
|---|---|
| **MATERIALS OF CONSTRUCTION** | |
| PIPEWORK & FITTINGS | Stainless steel |
| OPERATING VALVE | Stainless steel, full bore, stay open ball valve |
| SHOWER NOZZLE | Injection moulded nylon 6 |
| STANDARD FINISH | Polished brush |
| **SERVICES** | |
| WATER INLET | 1" female BSP |
| OPERATING PRESSURE | 2 to 6 BAR G / 29 to 87 PSI<br>(higher supply pressures accommodated with the incorporation of the optional pressure reducing valve) |
| MINIMUM FLOW RATES | 76 L per minute / 20 US gal per minute |
| **AMBIENT OPERATING TEMPERATURE** | |
| MINIMUM | 5C / 41F |
| MAXIMUM | 35C / 95F |
| **OPERATION** | |
| SHOWER/BODY SPRAY | Pull handle |
| **DIMENSIONS & WEIGHT** | |
| DIMENSIONS (WxDxH) | 865mm (34in) x 552mm (21.7in) x 578mm (22.7in) |
| WEIGHT | 3kg (7lb) |

# General Arrangement Drawing

## Over door mounted unheated safety shower

EXP-23GS/OD

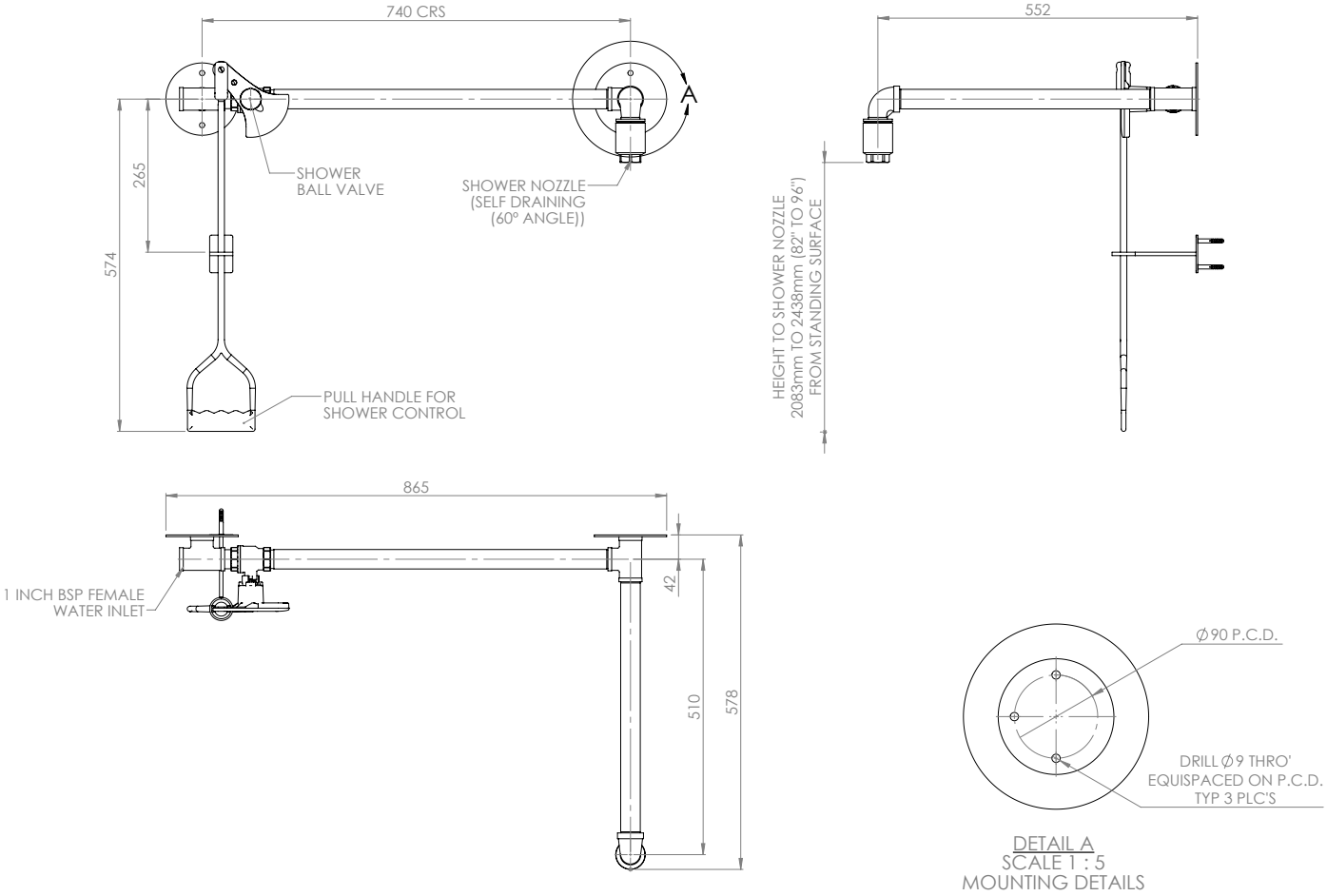



HUGHES
HUGHES-SAFETY.COM
Justrite Safety Group

www.hughes-safety.com

Hughes Safety Showers Ltd, Whitefield Road, Bredbury, Stockport SK6 2SS UK
**T: +44 (0)161 430 6618 E: sales@hughes-safety.com**